BMG PH Research & Development
Organizational Overview – May 2nd, 2006

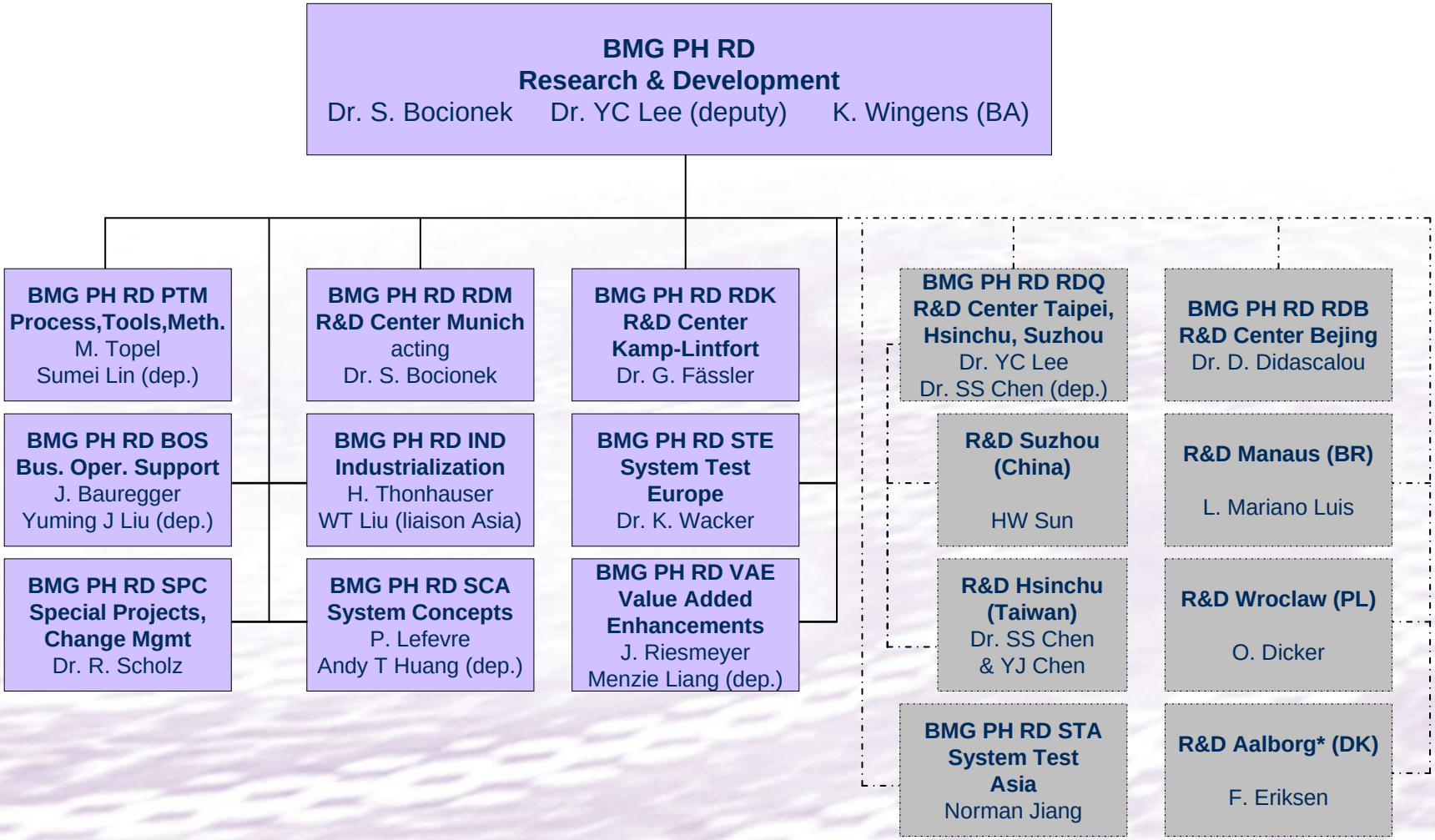

* until June 2006